www.bb-locks.com

SECURITY ESCUTCHEON SETH-17

(For 17mm Europrofile cylinder)
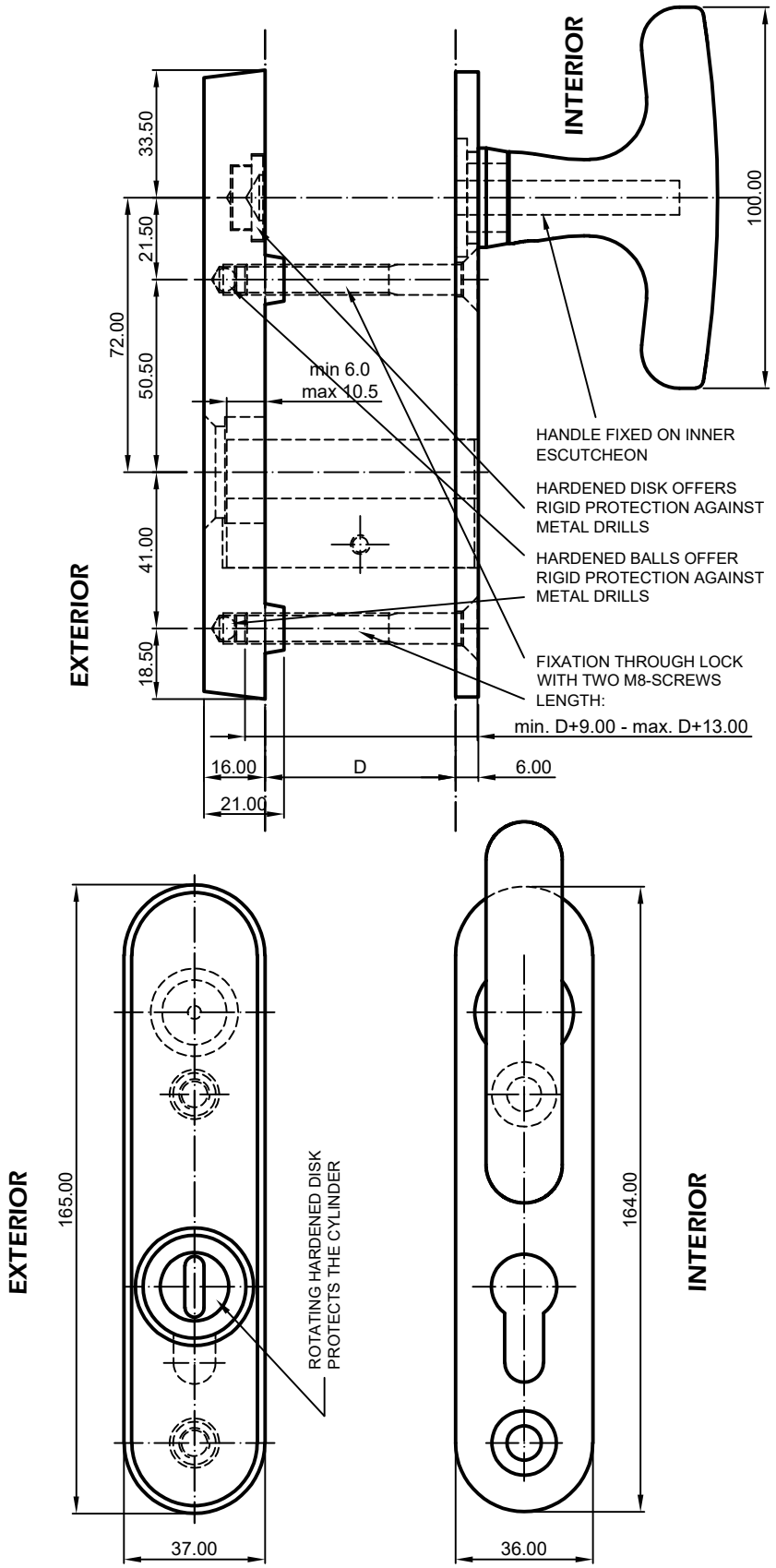
Can be used with:
A1-HX-series